Normandale Place

Suite 450 - 4,418 RSF

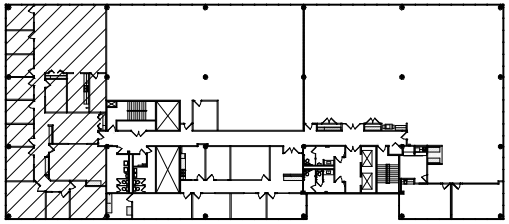

Key Plan - 4th Floor

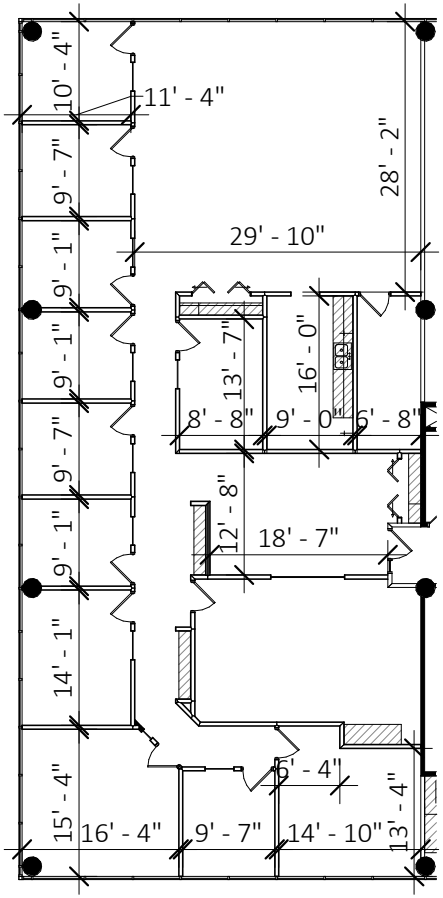

For Information, Contact
Jeff Houg
612-889-2242